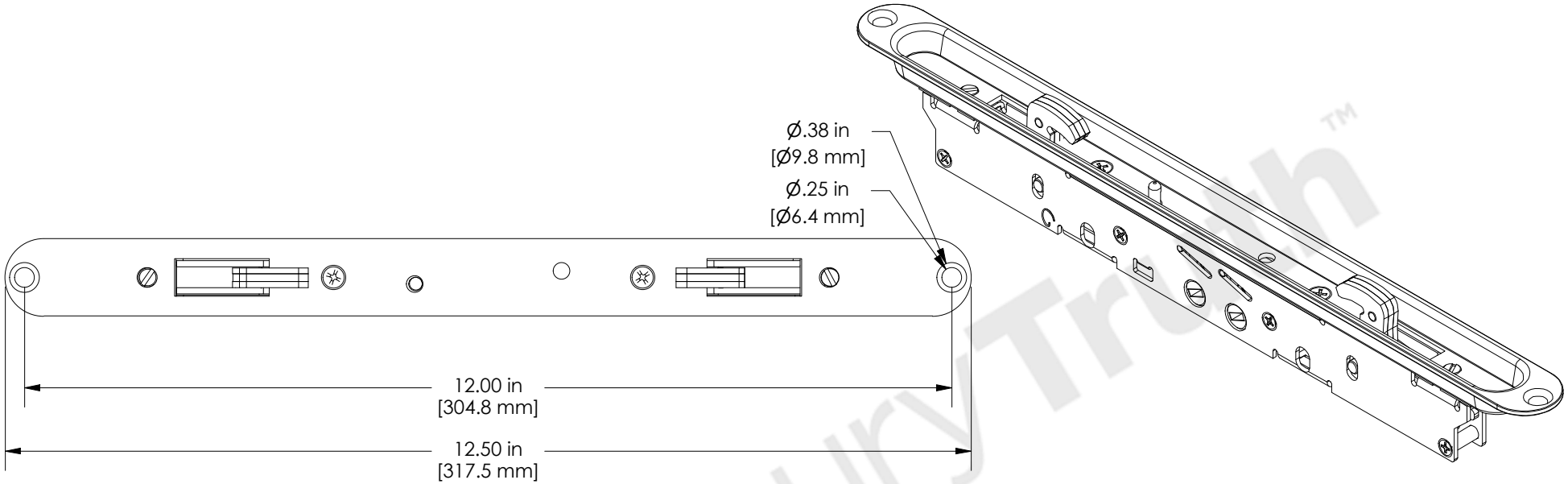

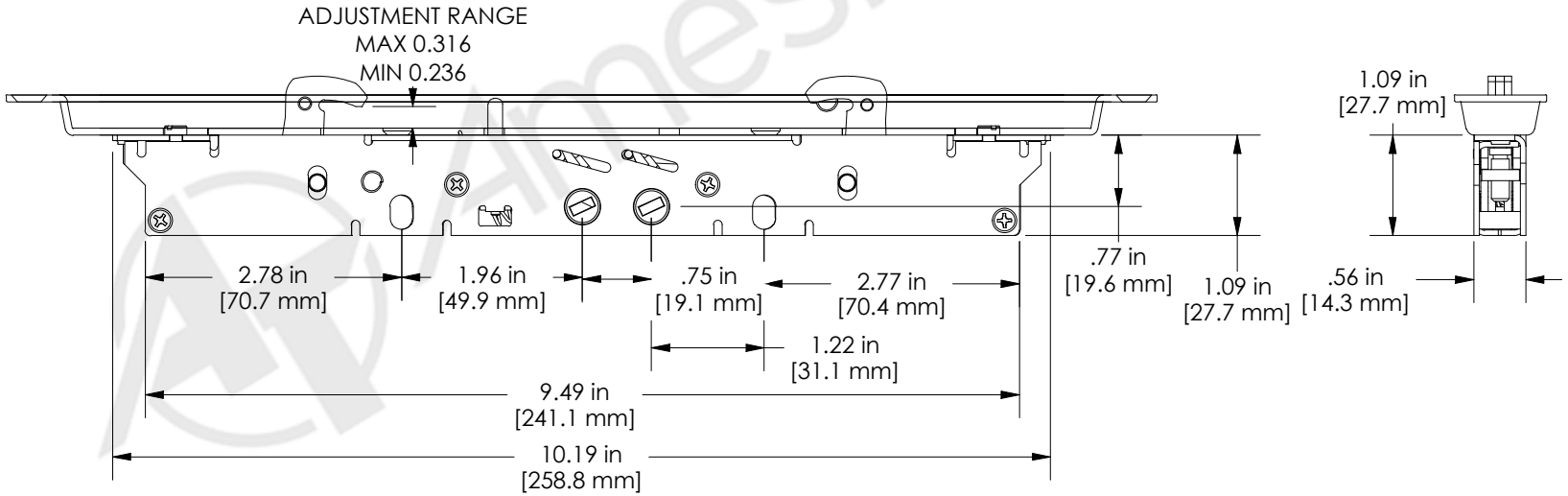

CUSTOMER PAGE

AmesburyTruth™

Engineered Solutions. Trusted Results.

INTERPRET PER: ASME Y14.5M-2009

UNITS: INCH

THIRD ANGLE PROJECTION

DRAWING TITLE: GEMINI II W/ 2507 TRIMPLATE

SCALE: 1 / 2

SHEET 1 OF 1

PART #: 2818